Examples of Multi Chip Array Circuits

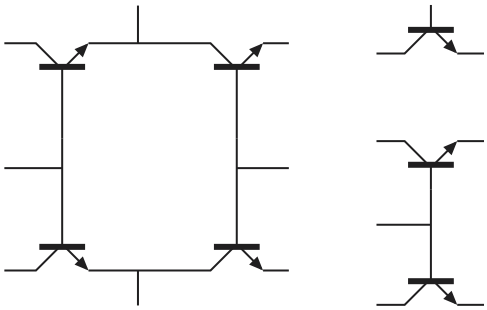

Type 1 (7 x NPN)

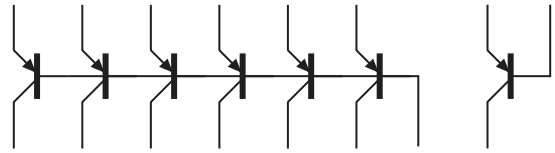

Type 5 (7 x PNP)

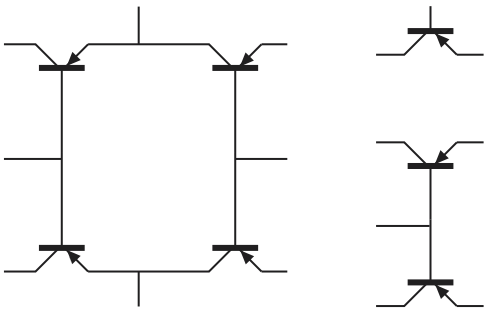

Type 2 (7 x PNP)

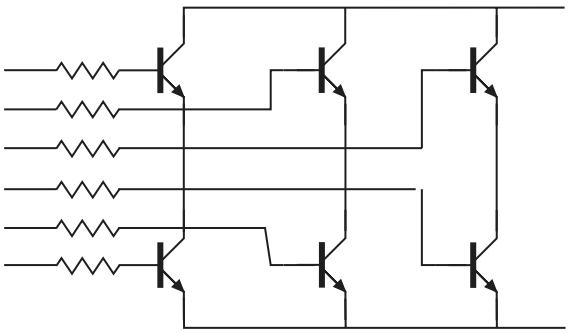

Type 6 (6 x NPN)

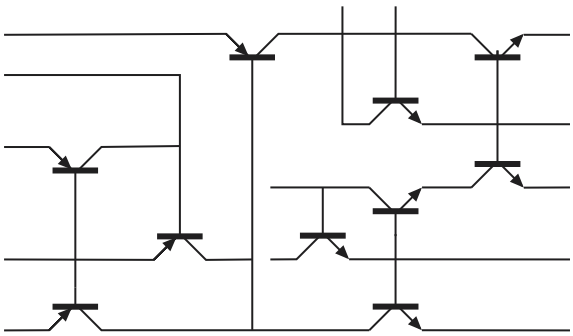

Type 3 (6 x NPN + 4 x PNP)

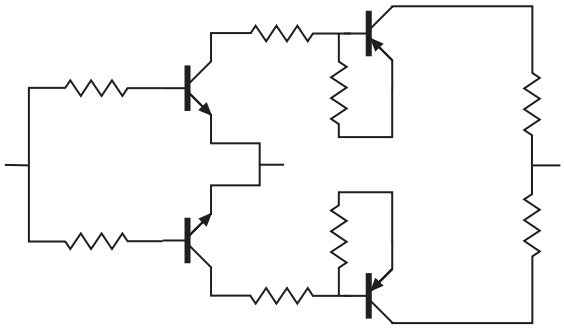

Type 7 (2 x NPN + 2 x PNP)

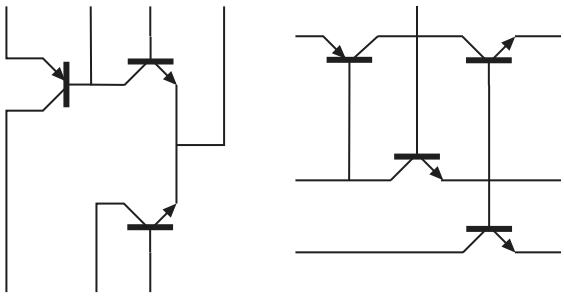

Type 4 (5 x NPN + 2 x PNP)

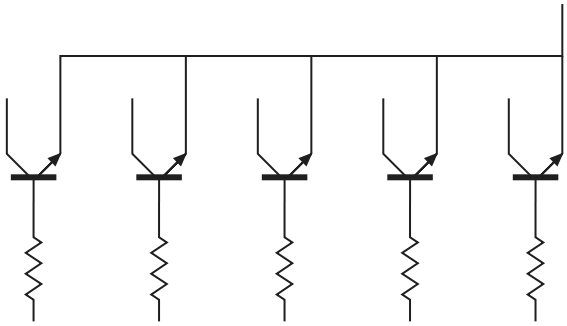

Type 8 (5 x NPN)

www.semelab.com Tel: +44 (0) 1455 556565

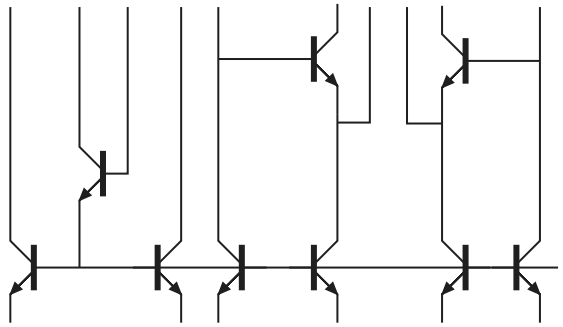

Type 9 (9 x NPN)

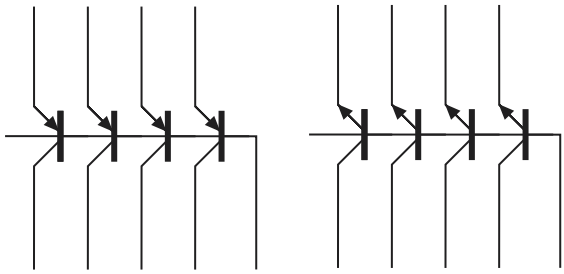

Type 10 (4 x NPN + 4 x PNP)

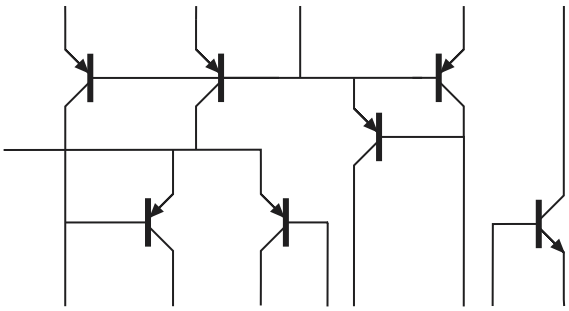

Type 11 (1 x NPN+ 6 x PNP)

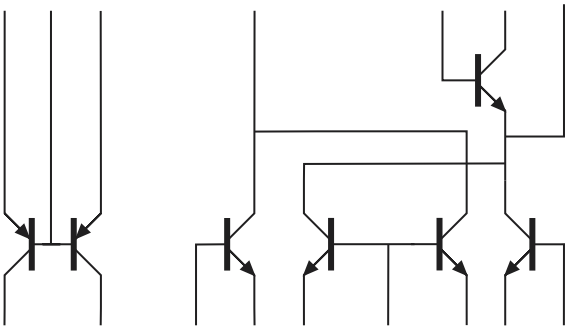

Type 12 (5 x NPN + 2x PNP)

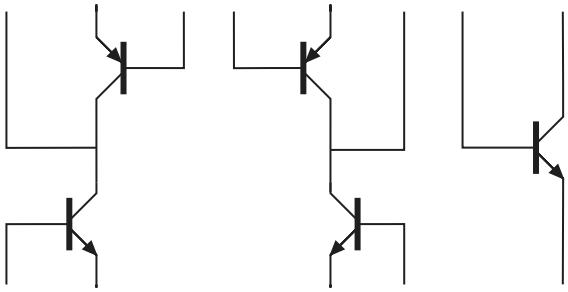

Type 13 (3 x NPN + 2 x PNP)

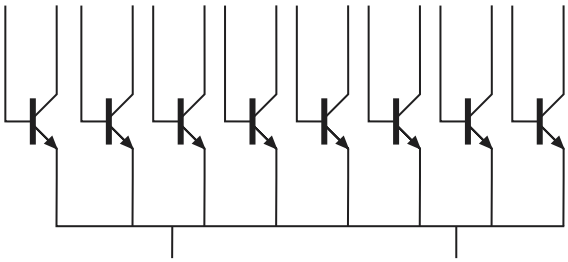

Type 14 (8 x NPN)

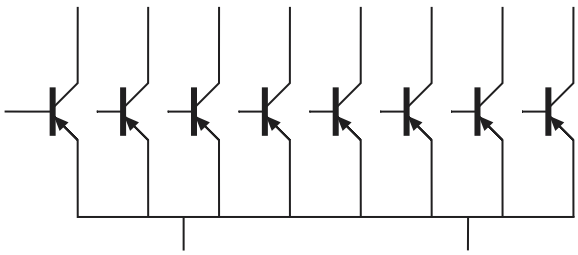

Type 15 (8 x PNP)

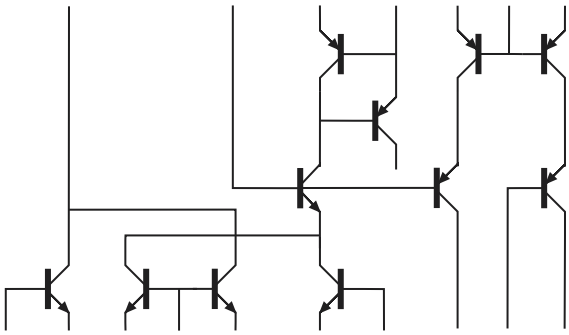

Type 16 (5 x NPN + 6 x PNP)

www.semelab.com Tel: +44 (0) 1455 556565

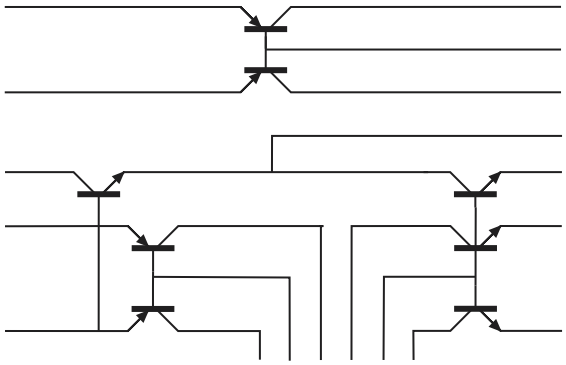

Type 17 (4 x NPN + 4 x PNP)

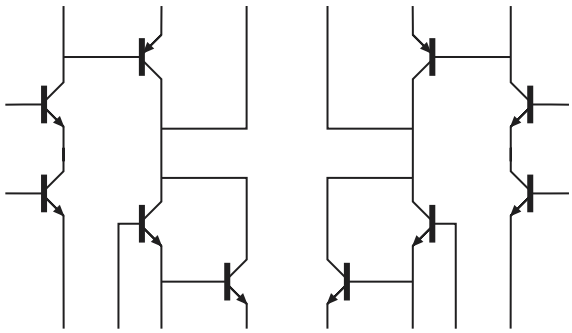

Type 21 (8 x NPN + 2 x PNP)

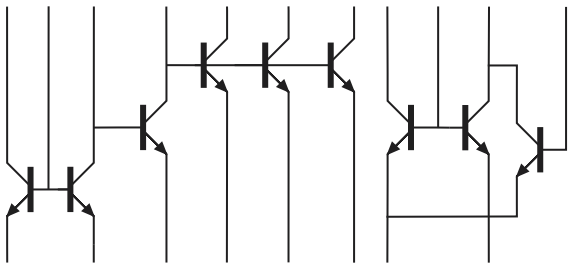

Type 18 (9 x NPN)

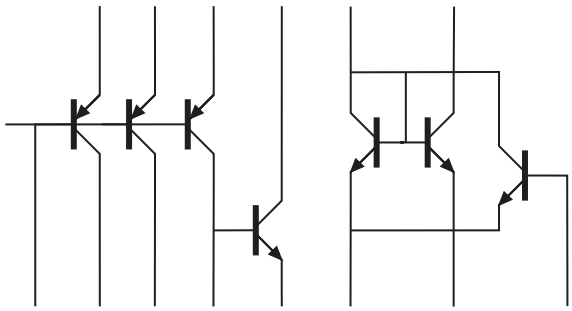

Type 22 (4 x NPN + 3 x PNP)

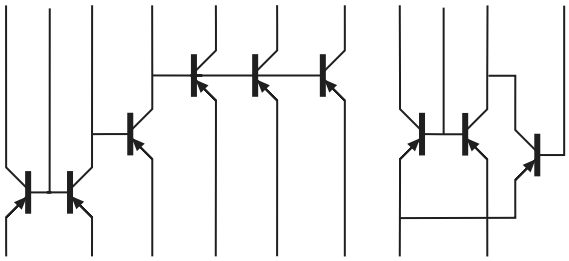

Type 19 (9 x PNP)

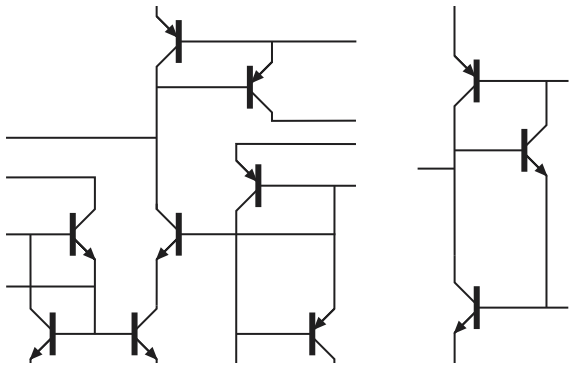

Type 23 (6 x NPN + 5 x PNP)

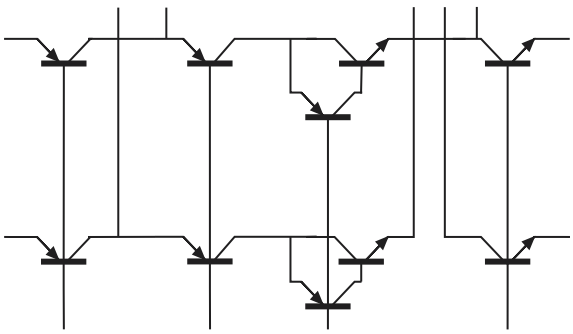

Type 20 (4 x NPN +6 x PNP)

www.semelab.com Tel: +44 (0) 1455 556565

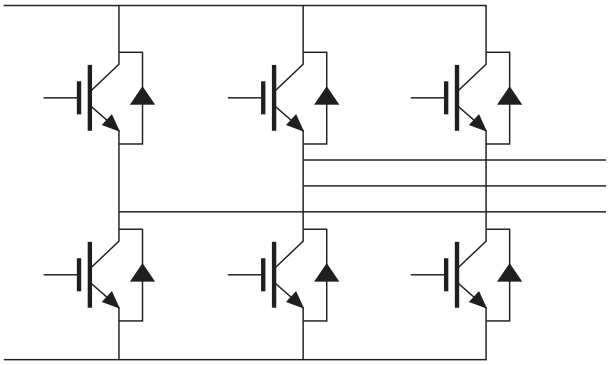

Type A

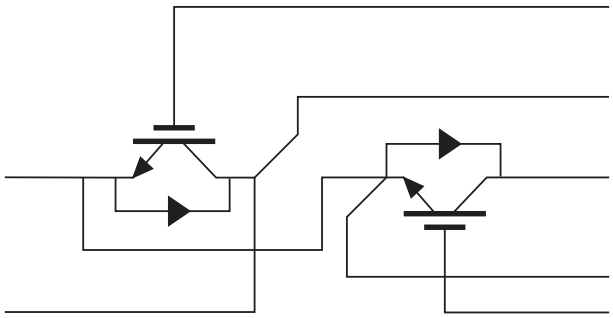

Type E

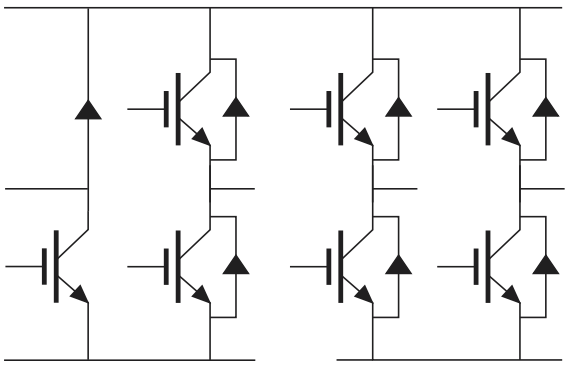

Type B

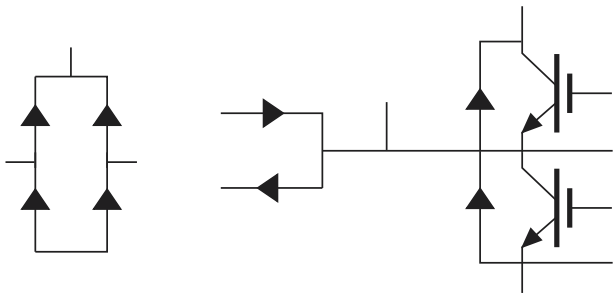

Type F

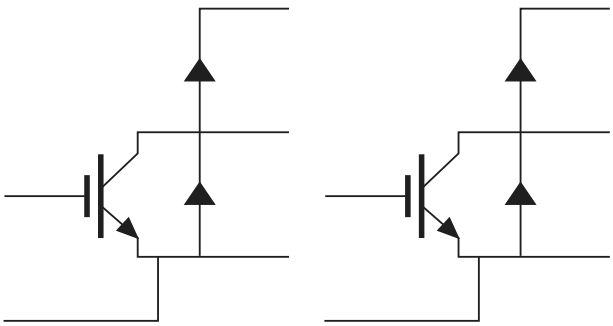

Type C

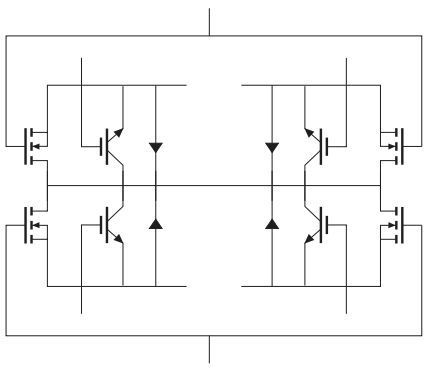

Type D

www.semelab.com Tel: +44 (0) 1455 556565